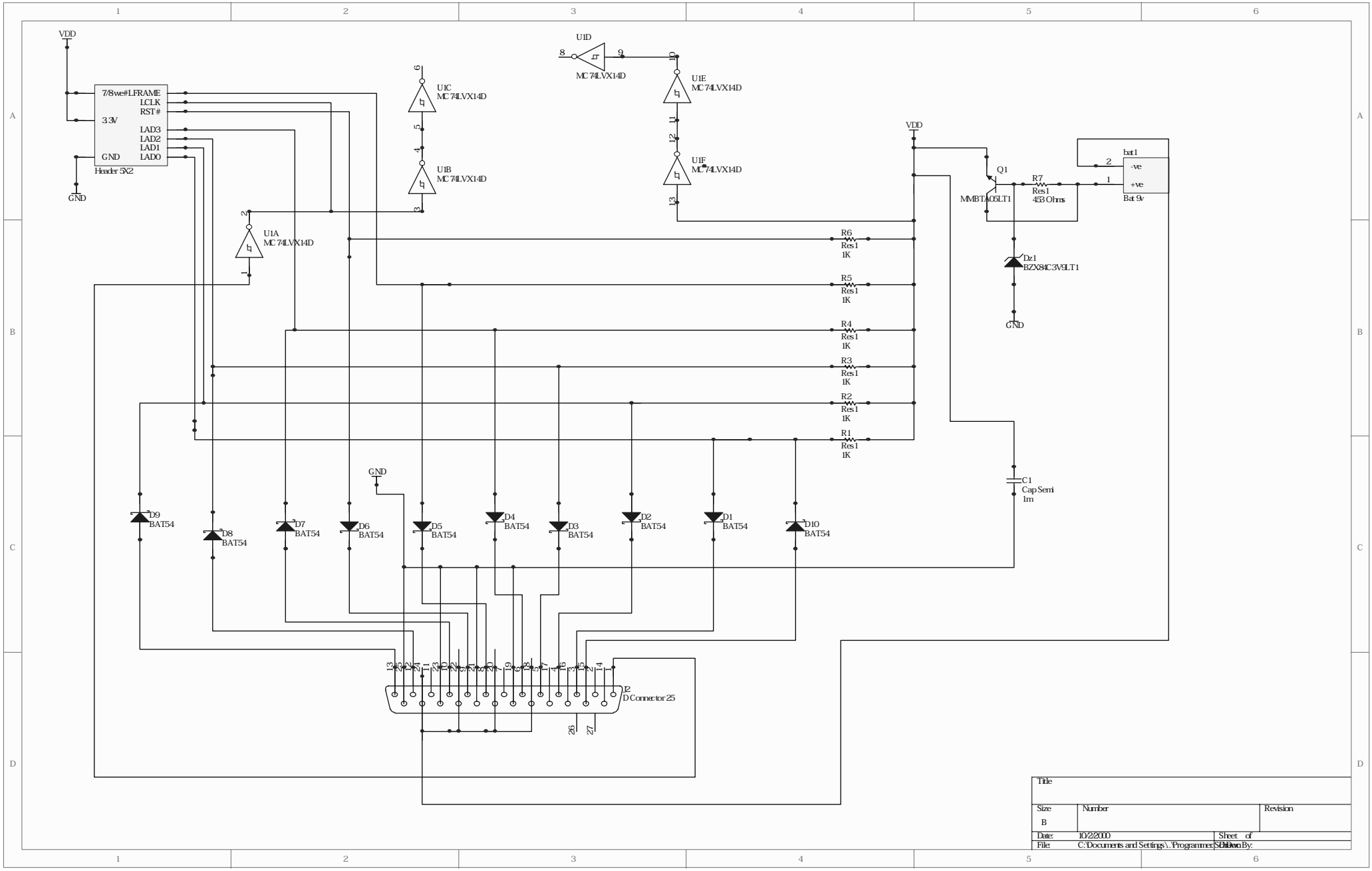
VDD
7/8we#LFRAME
LCLK
RST#
3.3V
LAD3
LAD2
LAD1
LAD0
GND
Header 5X2
U1A
MC74LVX14D
U1B
MC74LVX14D
U1C
MC74LVX14D
U1D
MC74LVX14D
U1E
MC74LVX14D
U1F
MC74LVX14D
Q1
MMBTA05LT1
R7
Res1
453 Ohms
bat1
-ve
+ve
Bat 9v
Dz1
BZX84C3V9LT1
R6
Res1
1K
R5
Res1
1K
R4
Res1
1K
R3
Res1
1K
R2
Res1
1K
R1
Res1
1K
C1
Cap Semi
1m
D9
BAT54
D8
BAT54
D7
BAT54
D6
BAT54
D5
BAT54
D4
BAT54
D3
BAT54
D2
BAT54
D1
BAT54
D10
BAT54
J2
D Connector 25
Title
Size
B
Number
Revision
Date:
10/2/2000
Sheet of
File:
C:\Documents and Settings\...\Programmer.SchDoc
Drawn By: